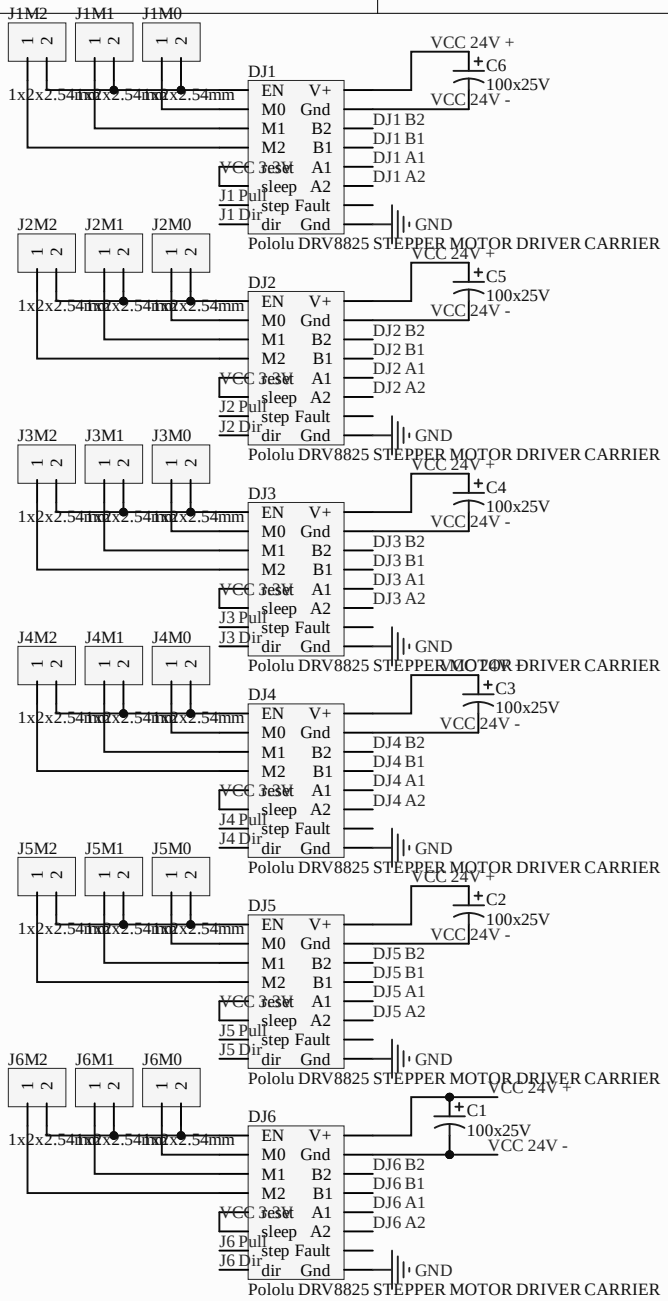

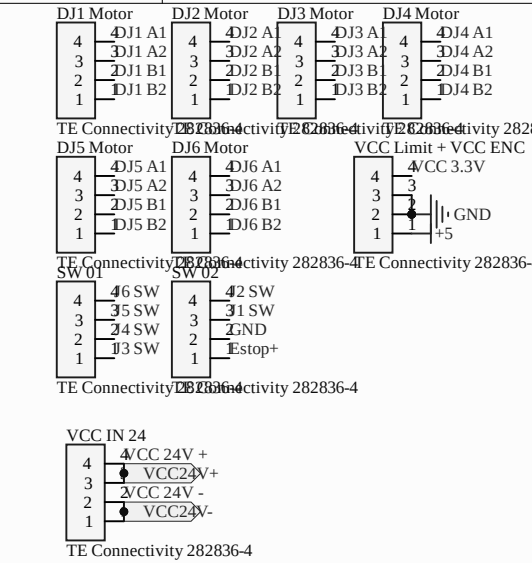

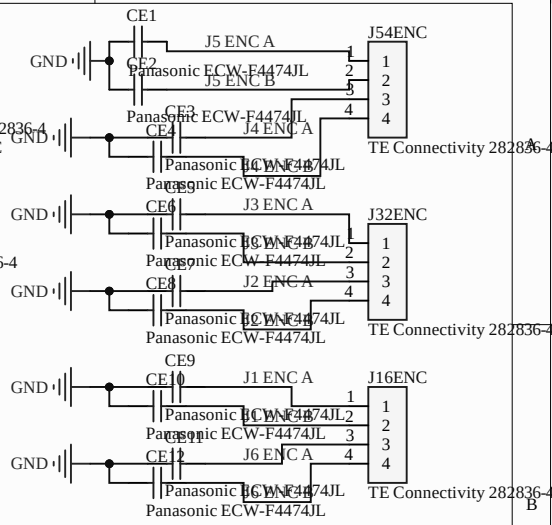

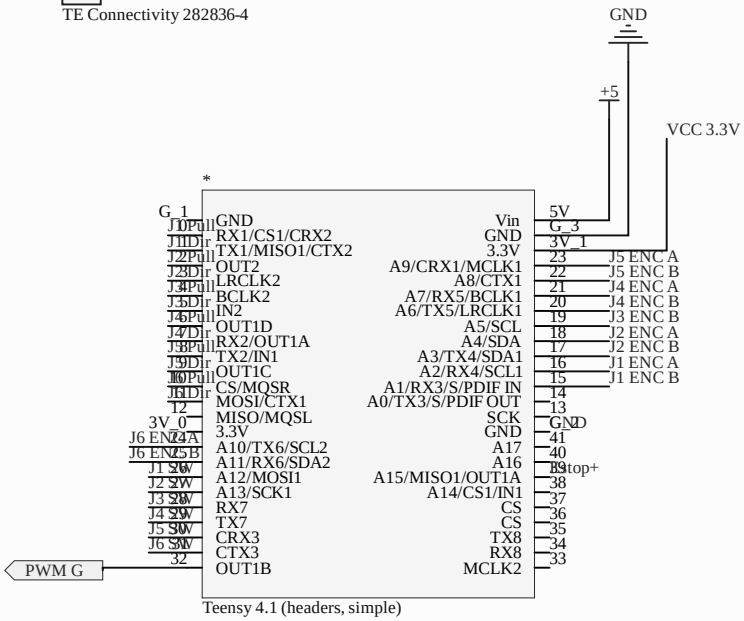

Title		
Placa expanziune robot		
Size A	Number	Revision
Date: 5/09/2024		Sheet of
File: Sheet1.SchDoc		Drawn By:

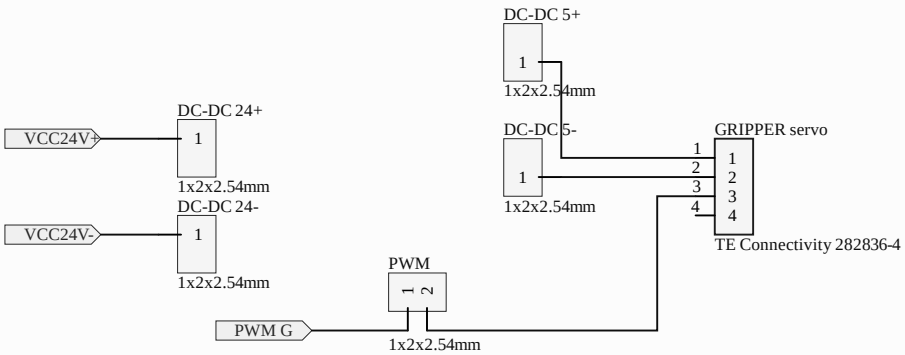

Title		
Size A	Number	Revision
Date: 5/09/2024	Sheet of	
File: Sheet2.SchDoc	Drawn By:	

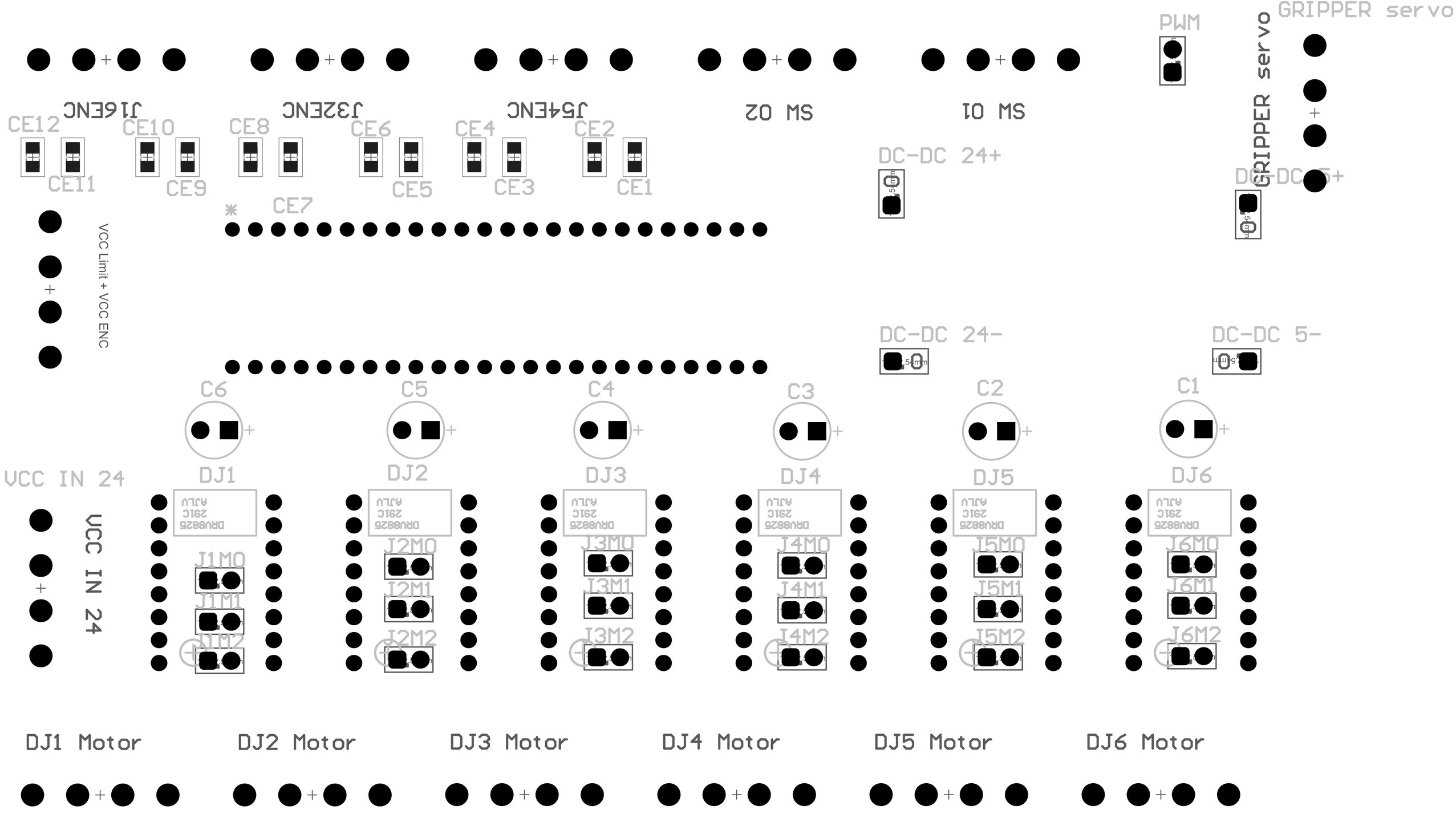
GRIPPER servo
PWM
GRIPPER servo
SW 01
SW 02
J54ENC
J32ENC
J16ENC
CE1
CE2
CE3
CE4
CE5
CE6
CE7
CE8
CE9
CE10
CE11
CE12
DC-DC 24+
DC-DC 5+
DC-DC 24-
DC-DC 5-
VCC Limit + VCC ENC
C1
C2
C3
C4
C5
C6
VCC IN 24
VCC IN 24
DJ1
DJ2
DJ3
DJ4
DJ5
DJ6
DRV8825
29IC
AJLU
J1M0
J1M1
J1M2
J2M0
J2M1
J2M2
J3M0
J3M1
J3M2
J4M0
J4M1
J4M2
J5M0
J5M1
J5M2
J6M0
J6M1
J6M2
DJ1 Motor
DJ2 Motor
DJ3 Motor
DJ4 Motor
DJ5 Motor
DJ6 Motor

J16ENC
J32ENC
J54ENC
SW 02
SW 01
GRIPPER servo
VCC Limit + VCC ENC
VCC IN 24
DJ1 Motor
DJ2 Motor
DJ3 Motor
DJ4 Motor
DJ5 Motor
DJ6 Motor