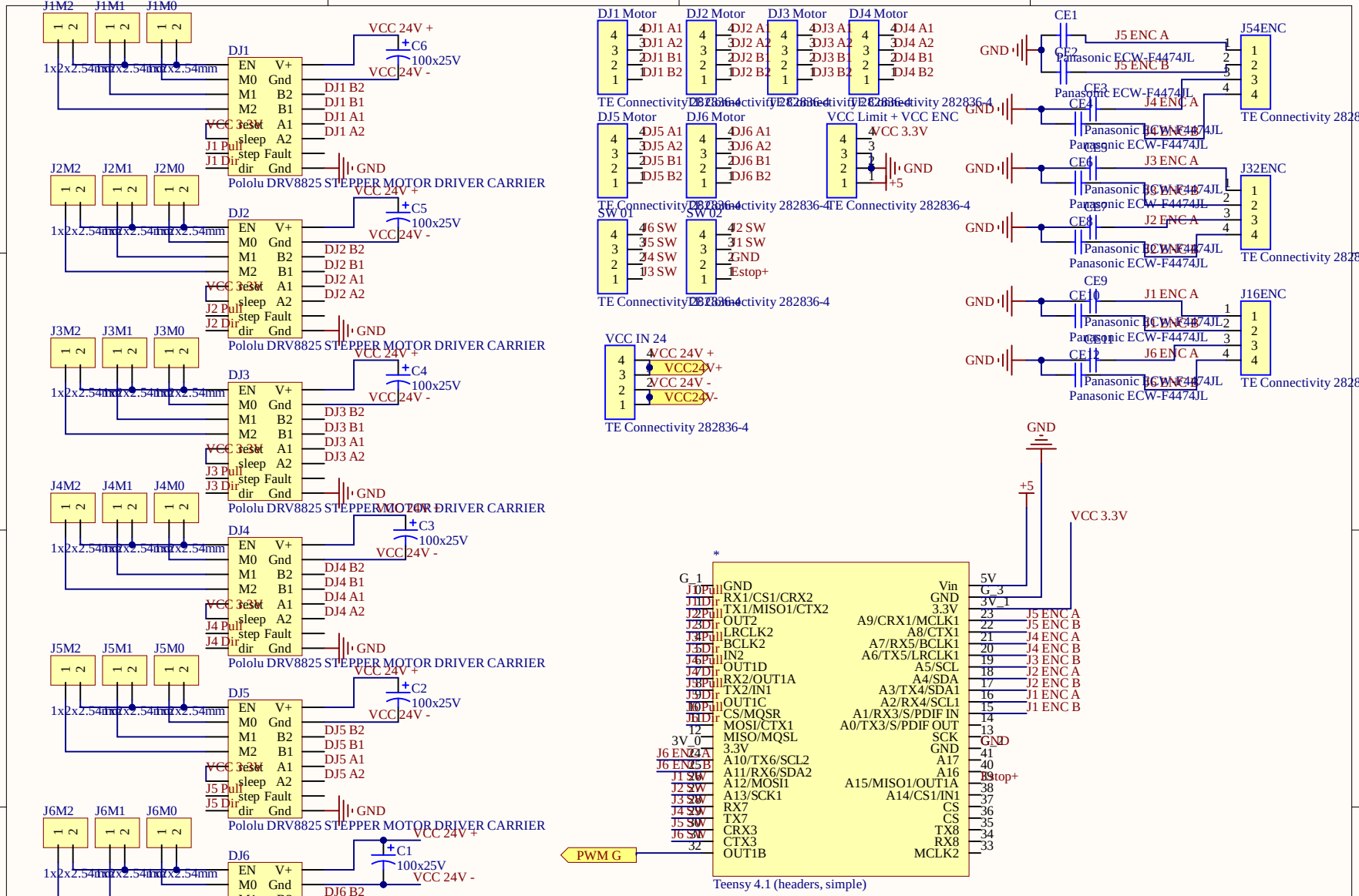
J1M2 J1M1 J1M0
DJ1
Pololu DRV8825 STEPPER MOTOR DRIVER CARRIER
J2M2 J2M1 J2M0
DJ2
J3M2 J3M1 J3M0
DJ3
J4M2 J4M1 J4M0
DJ4
J5M2 J5M1 J5M0
DJ5
J6M2 J6M1 J6M0
DJ6
1x2x2.54mm
VCC 24V +
VCC 24V -
C1
C2
C3
C4
C5
C6
100x25V
GND
VCC 3.3V
DJ1 Motor
DJ2 Motor
DJ3 Motor
DJ4 Motor
DJ5 Motor
DJ6 Motor
TE Connectivity 282836-4
VCC Limit + VCC ENC
SW 01
SW 02
VCC IN 24
CE1
CE2
CE3
CE4
CE5
CE6
CE7
CE8
CE9
CE10
CE11
CE12
Panasonic ECW-F4474JL
J54ENC
J32ENC
J16ENC
J5 ENC A
J5 ENC B
J4 ENC A
J3 ENC A
J2 ENC A
J1 ENC A
J6 ENC A
Teensy 4.1 (headers, simple)
PWM G
Title
Placa expanziune robot
Size
A
Number
Revision
Date: 5/09/2024
Sheet of
File: Sheet1.SchDoc
Drawn By:

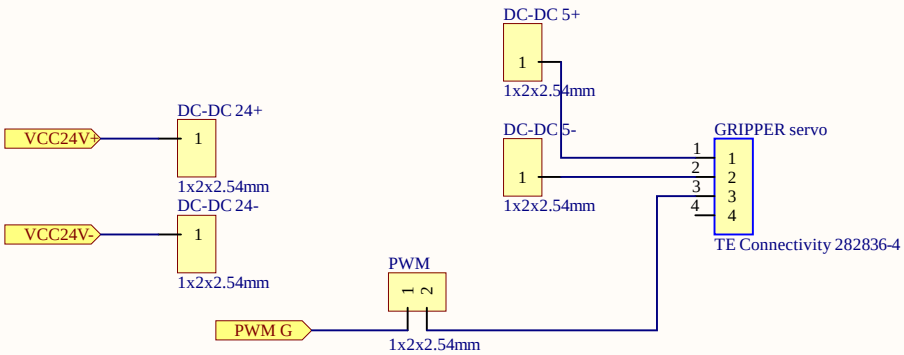

Title		
Size A	Number	Revision
Date: 5/09/2024		Sheet of
File: Sheet2.SchDoc		Drawn By: